ASSEMBLY INSTRUCTION

BEARMAN 3 SEATER RECLINERS

ITEM CODE **822200001**

Imported by Amart Furniture Pty Ltd, Qld, Brisbane Australia.
For any assistance with assembly or for missing parts please phone Amart Furniture, Customer Service Free call 1800 351 084

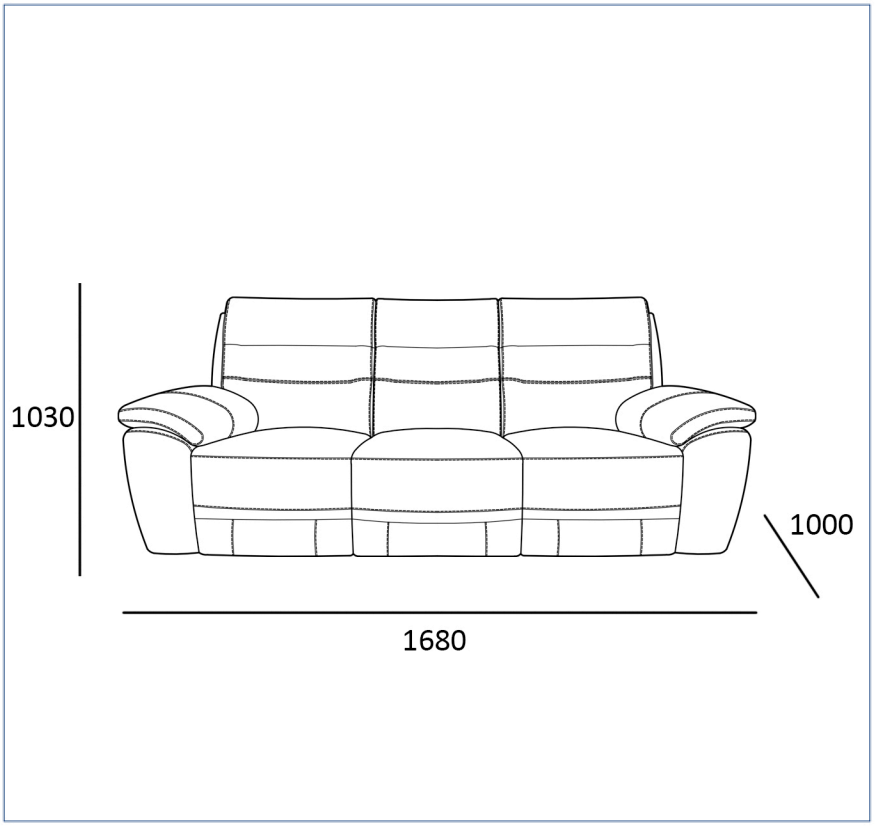

Imported by Amart Furniture Pty Ltd, Qld, Brisbane Australia.
For any assistance with assembly or for missing parts please phone Amart Furniture, Customer Service Free call 1800 351 084

PRE-ASSEMBLY PREPARATION

Before you start:

1. Choose a clean, level, spacious assembly area. Avoid hard surfaces that may damage the product
2. Take care when lifting. Product should be assembled as near as possible to the point of use
3. Ensure that you have all required contents for complete assembly
4. Always read the assembly instructions carefully before beginning assembly.
5. Keep all hardware parts and packaging out of reach of small children.
6. Do not over tighten the screws and bolts as this may damage the threads

WARNING

- Do Not allow children to play on this mechanised furniture or operate the mechanism. Leg rest folds down on closing so that a child could possibly be injured. Always leave in an upright and closed position. Keep hands and feet clear of mechanism. Only the occupant should operate it.

PARTS LIST

1	Right recliner backrest
2	Right recliner seat
3	Element backrest
4	Element seat
5	Left recliner backrest
6	Left recliner seat

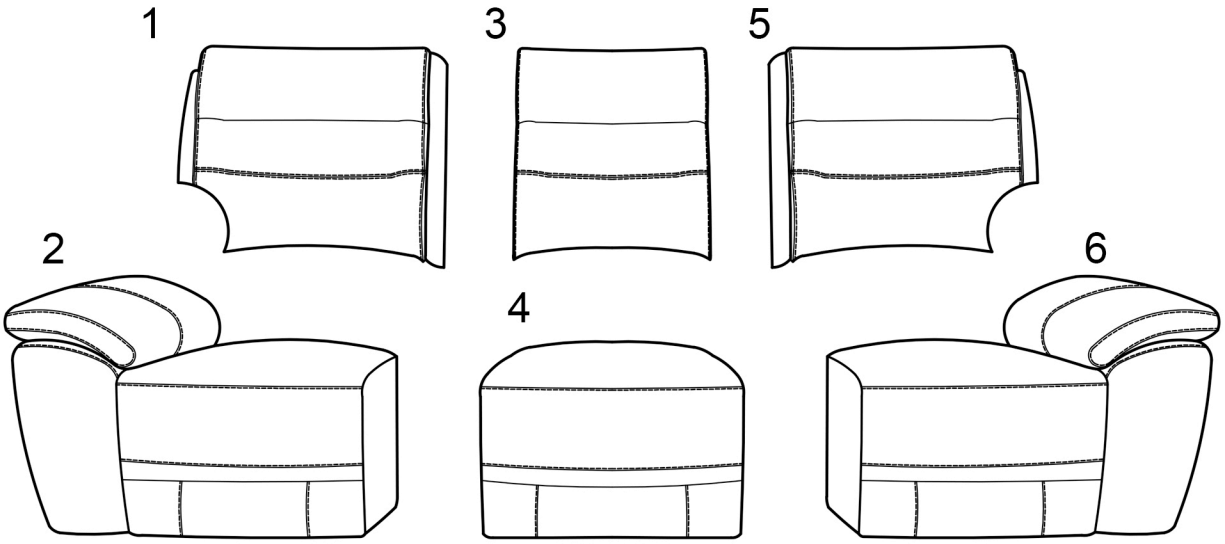

822200001

STEP 1

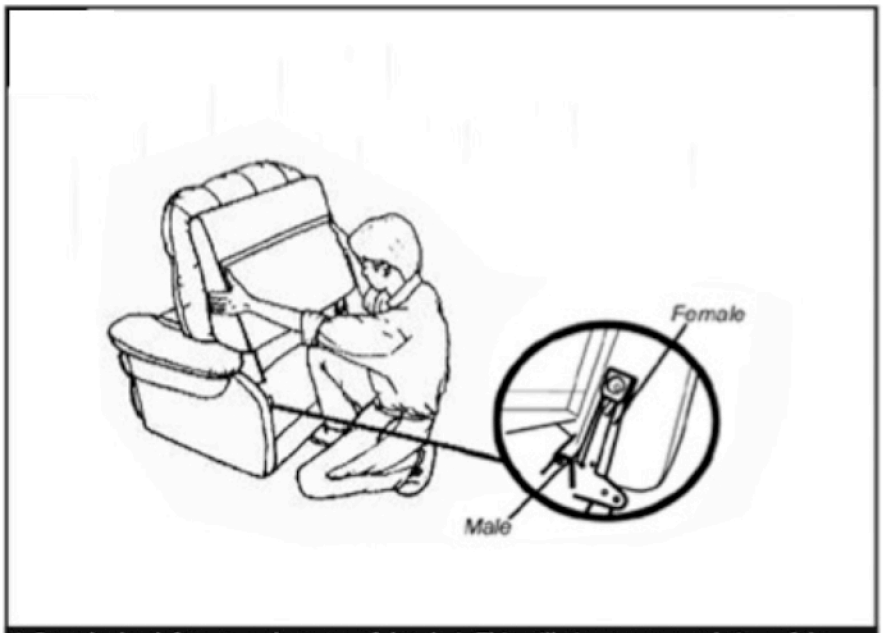

1. Rest the back frame on the arms of the chair. This will give you a good view of the male and female K D brackets
2. Insert male K D bracket into the female K D bracket on one side to a depth of 5 - 10 mm
3. While keeping the backrest leaning forward, insert male K D bracket of the other side into female K D bracket to 5 - 10 mm

STEP 2

1. Straighten the backrest to a vertical position and lower the backrest evenly on both side to the position that rest on the top edge of the lock
2. Push on the top of the back rest to lock the bracket into position

STEP 3

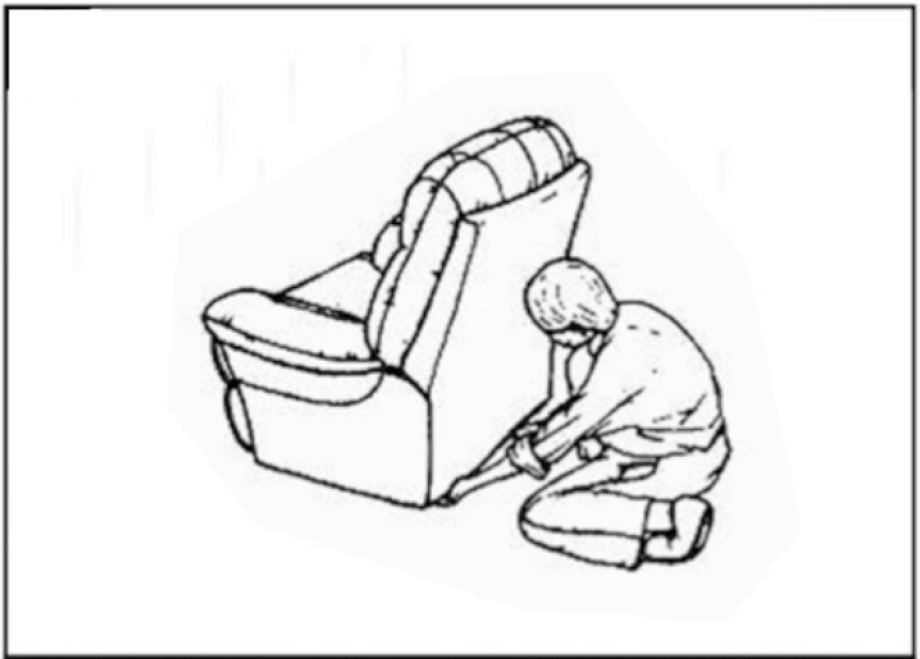

1. Pull the bottom of the back cover to the base of the chair and tape it along the Velcro

STEP 4

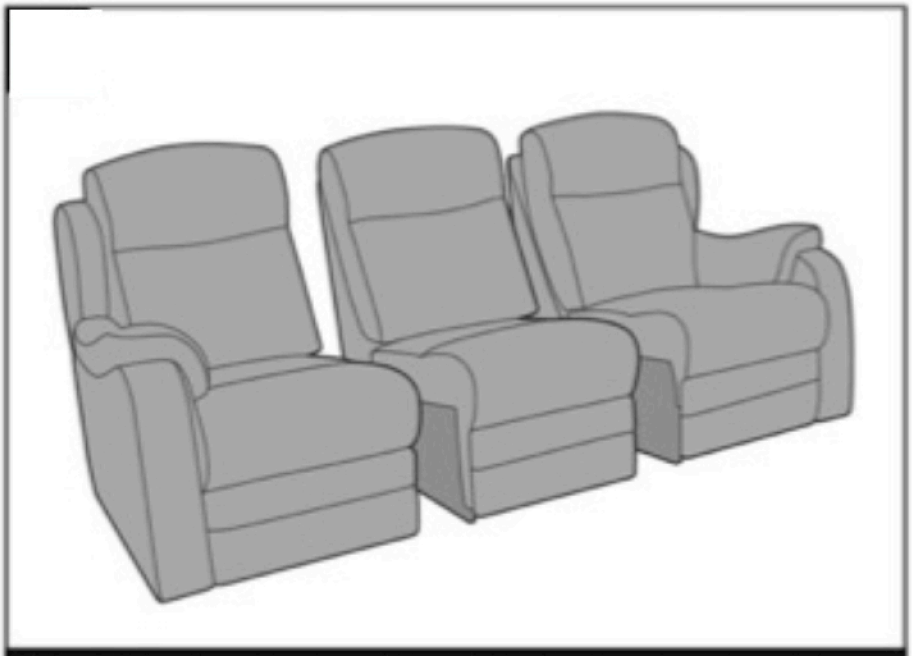

Your three/two seater sofa are now ready to be joined together

Line up the units, ensuring all cables are out of the way.

STEP 5

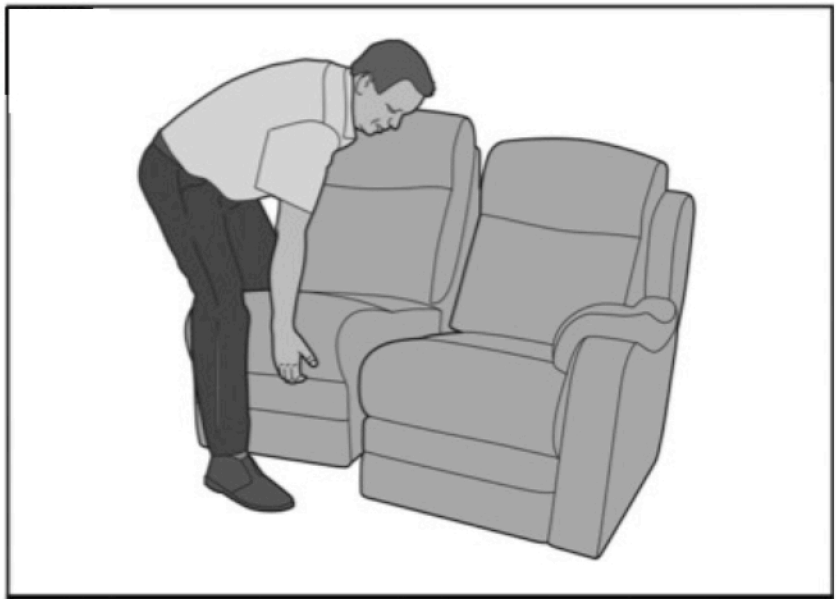

To link the units together always start the process from left to right. Lift and line up the linking pegs on the second unit with the slots on the first unit and lock into position. Note Step 9 for visual detail of the linking bracket.

STEP 6

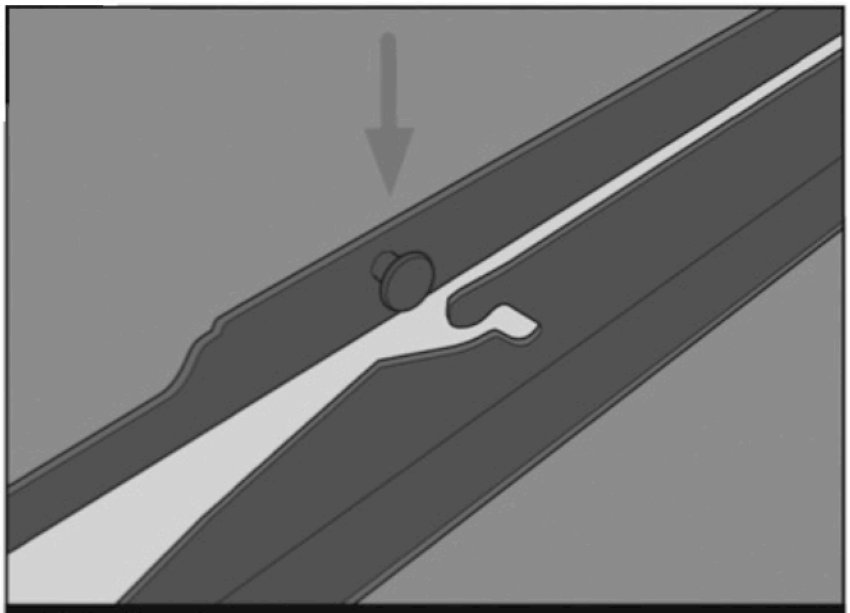

Linking brackets.

STEP 7

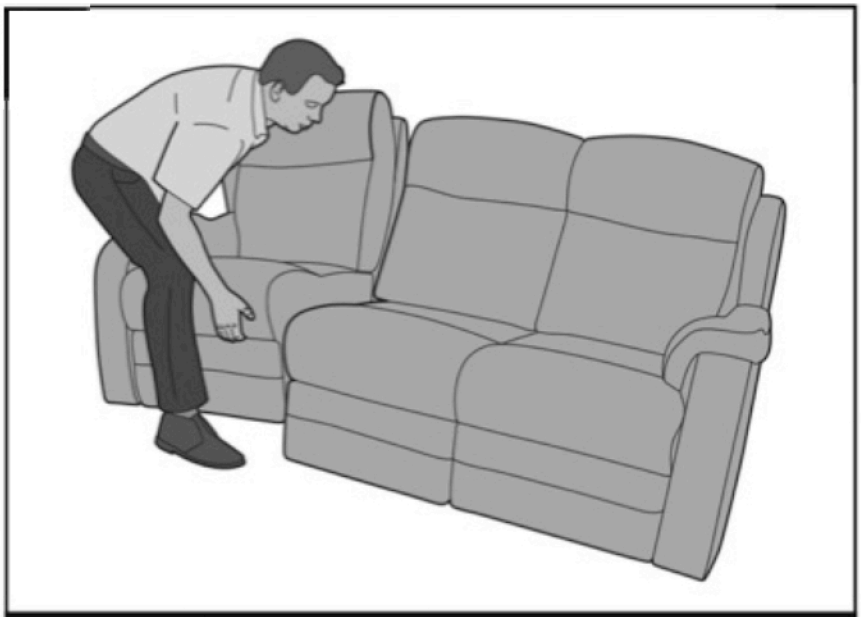

Repeat step 6 for the third unit.

STEP 8

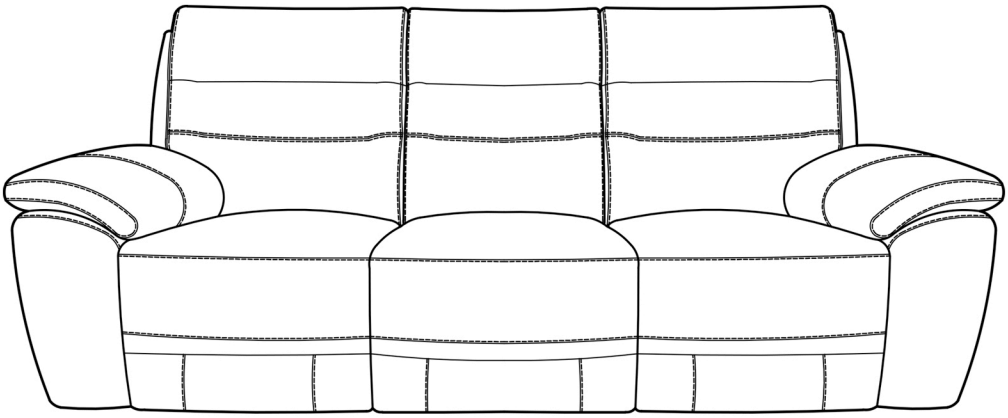

Carefully tilt the connected sofa onto its feet. Your sofa is now ready for use.

CARE AND MAINTENANCE

When necessary brush or vacuum away dust and grit. Wipe over with a soft, clean, colourfast cloth

FOR SPOTS AND SPILLS:

- Wipe excess liquid up immediately with an absorbent cloth or sponge

FOR OVERALL CLEANING:

- We recommend cleaning every 3-4 months with leather cleaner followed by applications of leather protector
- Always follow directions on packs

NOTES:

- Accumulation of perspiration and body oils on arm pads, headrests, etc. may damage your leather. These areas may require more frequent cleaning
- Leather is not recommended for users on frequent medication. Particularly heart, blood pressure, diabetes or chemotherapy medication. This medication can seep through the skin and when combined with perspiration, attacks the protective polyurethane coating of the leather
- Leather is a natural product and any stress may result in tears. Additionally when stretched the leather might not completely return to its original shape. Therefore when leather is used more intensively it may become loose over time
- If cushions are sewn to the frame, any pulling or tugging might result in a tear. Please avoid any leaning, sitting or reaching over the back/arms of the sofa
- To keep your cushions looking fluffy and new, use seating evenly
- Leather is not resistant to animals. Allowing pets on your leather is not recommended. Their claws and jaws may scratch the covers, which can lead to expensive repair. Their saliva is acidic and may also harm the leather finish

DO NOT:

- Dry clean or machine wash
- Expose leather to direct sunlight, intensive heat, weather or soak unnecessarily. Always avoid excessive hard rubbing
- Use saddle soap, detergents, solvents, abrasives, unidentified leather cleaners, suede cleaners or any products containing silicon or solvents
- Use silicone based leather care products. These can damage the coating over time. Any leather care product with an oily or greasy feel should be avoided
- Expose leather to new clothing, cushions or throws as this may lead to dye transfer and permanent staining. Ensure these items are colourfast before placing them on the leather

READ THESE INSTRUCTIONS THOROUGHLY BEFORE USE:

DANGER: TO REDUCE THE RISK OF ELECTRIC SHOCK:
Always unplug from electric outlet before cleaning.

WARNING: RISK OF INJURY
Keep children away from extended footrest and any moving parts.

CAUTION:

- Do not allow children to play on this electric recliner or operate the powered mechanism. The leg rest folds when closing and could possibly cause injury to a child. Always leave the recliner in an upright and closed position when not in use. Keep hands and feet clear of mechanism. Only the occupant should operate it.
- Do ensure fully enter the normal sitting position before using of the recliner. Improper sitting, such as sitting in the front of recliner may result in damage to both mechanism and motor drive bar.

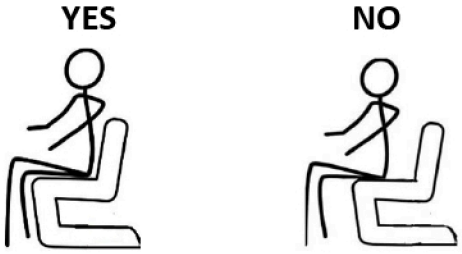

POWER CORD SAFETY

WARNING: Unplug and remove power cord from wall when not in use and store out of reach of children.
Take care when moving recliner that wall and transformer cords are not under the base or they may get damaged.

- NEVER OPERATE ELECTRIC RECLINER IF IT HAS A DAMAGED CORD OR PLUG.

WARNING: TO REDUCE RISK OF BURNS, FIRE, ELECTRIC SHOCK OR PERSONAL INJURY TO PERSONS:

- Use only for its intended purpose
- Never press or activate control switch if you are not seated in recliner
- Only the occupant should activate the control switch
- Never operate with more than one person occupying seat
- Never sit or stand on the footrest